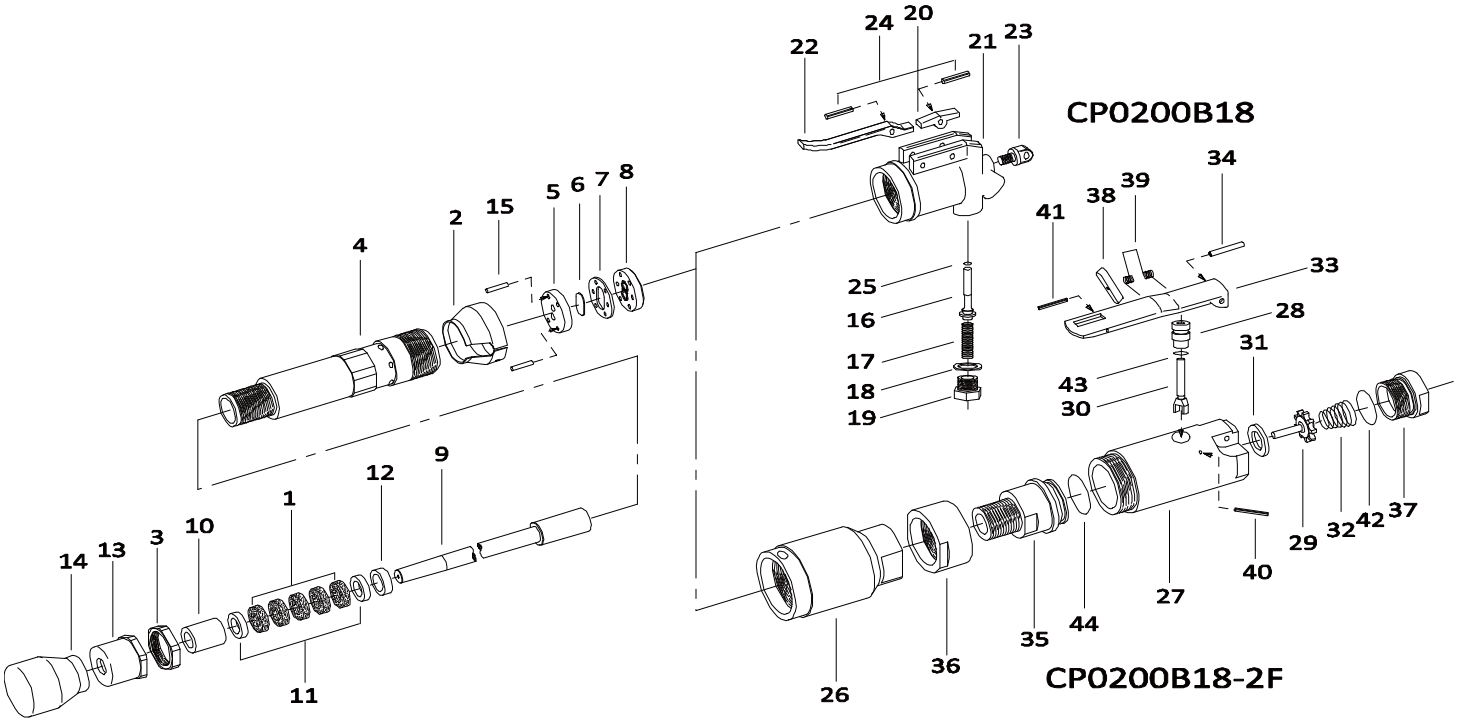

Index No.	Part No.	Description	Qty.
1	5412055424	Felt Ring	5
2	5412055425	Exhaust Cover	1
3	5412055426	Lock Nut	1
4	5412102963	Cylinder CP0200B18	1
4	5412102964	Cylinder CP0200B18-2F	
9	5412055433	Piston	1
13	5412055437	Grand	1
14	5412055533	Rubber Butt 41 mm	1
21	5412055422	Cap	1
23	5412055427	Hanger	1
26	5412055443	Cap	1
27	5412058775	Throttle Valve Body	1
35	5412058781	Throttle Valve Stem	1
36	5412058783	Throttle Valve Stem Nut	1
37	5412076996	Inlet<NPT>	1
A	**8940170198**	**Valve Kit**	
5		Valve Sheet	1
6		Valve	1
7		Valve Case	1
8		Valve Cover	1
15		Pin	2
B	**8940170199**	**Packing Kit**	
10		Piston Bushing	1
11		Leather Packing	2
12		Packing Sheet	1
C	**8940170200**	**Throttle B18 Kit**	
16		Throttle Valve	1
17		Throttle Valve Spring	1
18		Throttle Valve Cover Packing	1
19		Throttle Valve Cover	1
25	5412055208	"O" Ring	1

Index No.	Part No.	Description	Qty.
D	**8940170201**	**Lever B18 Kit**	
20		Throttle Valve Lever	1
22		Throttle Valve Lever<B>	1
24		Spring Pin	2
E	**8940170202**	**Throttle Kit 2F Model**	
28		Throttle Valve Bushing	1
30		Throttle Valve Rod	1
40		Spring Pin	1
43		"O" Ring	1
F	**8940170203**	**Throttle Valve Kit 2F Model**	
29		Throttle Valve	1
31		Throttle Valve Sheet	1
32		Throttle Valve Spring	1
42		"O" Ring	1
G	**8940170204**	**Safety Lever Kit 2F Model**	
33		Throttle Valve Lever	1
34		Throttle Valve Lever Pin	1
38		Lock Key	1
39		Lock Spring	1
41		Spring Pin	1
H	**8940170210**	**Tune-up Kit**	
42		"O" Ring	1
43		"O" Ring	1
44		"O" Ring	1
I	**8940170205**	**Small Part Kit B18**	
	include 6, 15, 24		
J	**8940170275**	**Small Part Kit B18-2F**	
	include 6, 15, 34, 39, 40, 41		

6159948780	Safety instructions	1
2050558133	Operator's manual	1
5412060277	Warning Label	1

Spare parts without part number are not sold separately - High wear parts underlined

Contact us at www.cp.com